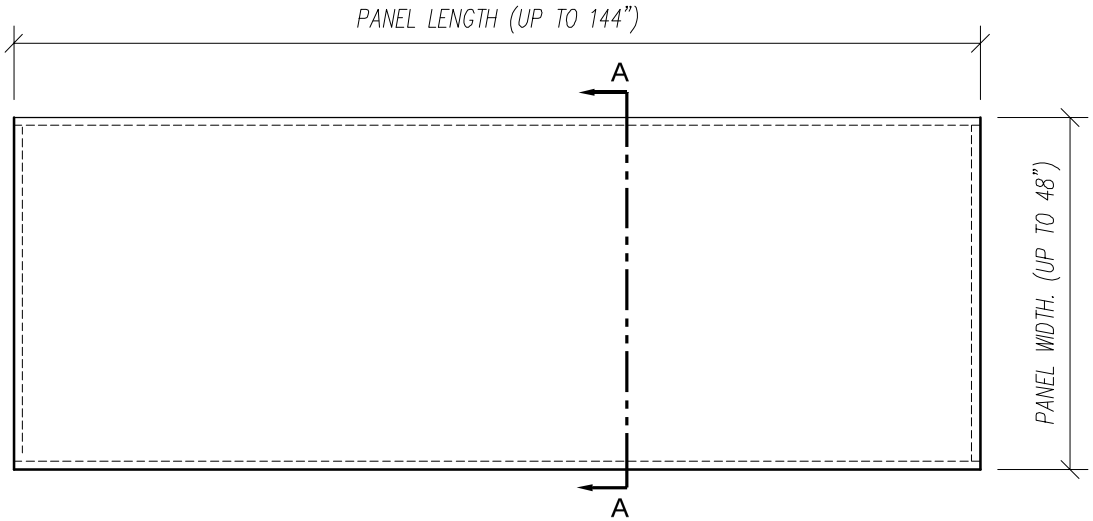

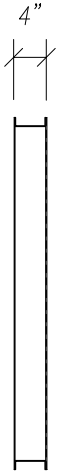

H/P-42 ACOUSTIC BARRIER WALL PANEL

FRONT & SIDE ELEVATIONS

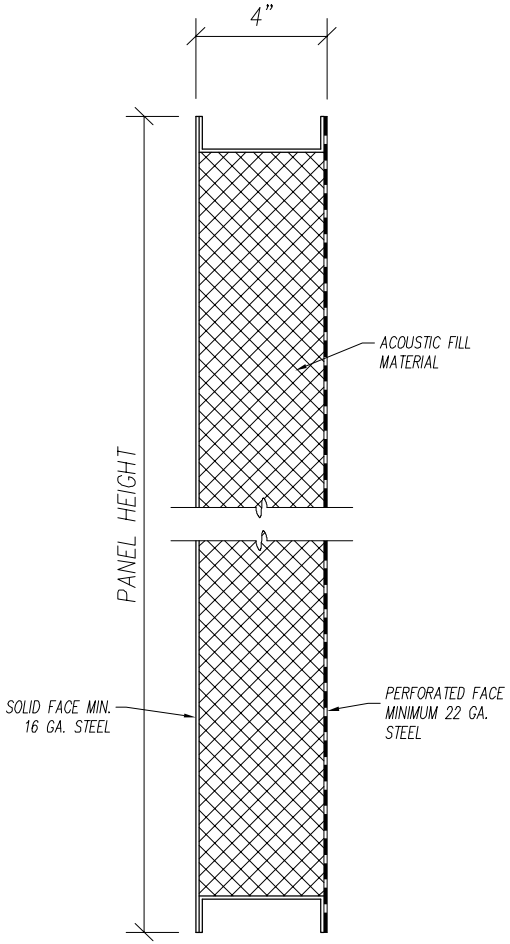

SECTION A-A

PANEL No.	QTY.	PANEL LENGTH	PANEL HEIGHT

'H/P-42' BARRIER PANEL

REVISIONS	DESCRIPTION	DATE	BY

DESCRIPTION: QUIETLINE H/P-42 BARRIER PANEL		
PROJECT		
DRAWN BY	SCALE	PROJECT NO. H/P-42-2
DATE	SHEET	

Noise Barriers, LLC
2001 Kelley Court, Libertyville, IL 60048
Phone: 847-843-0500
Fax: 847-843-0501
www.noisebarriers.com